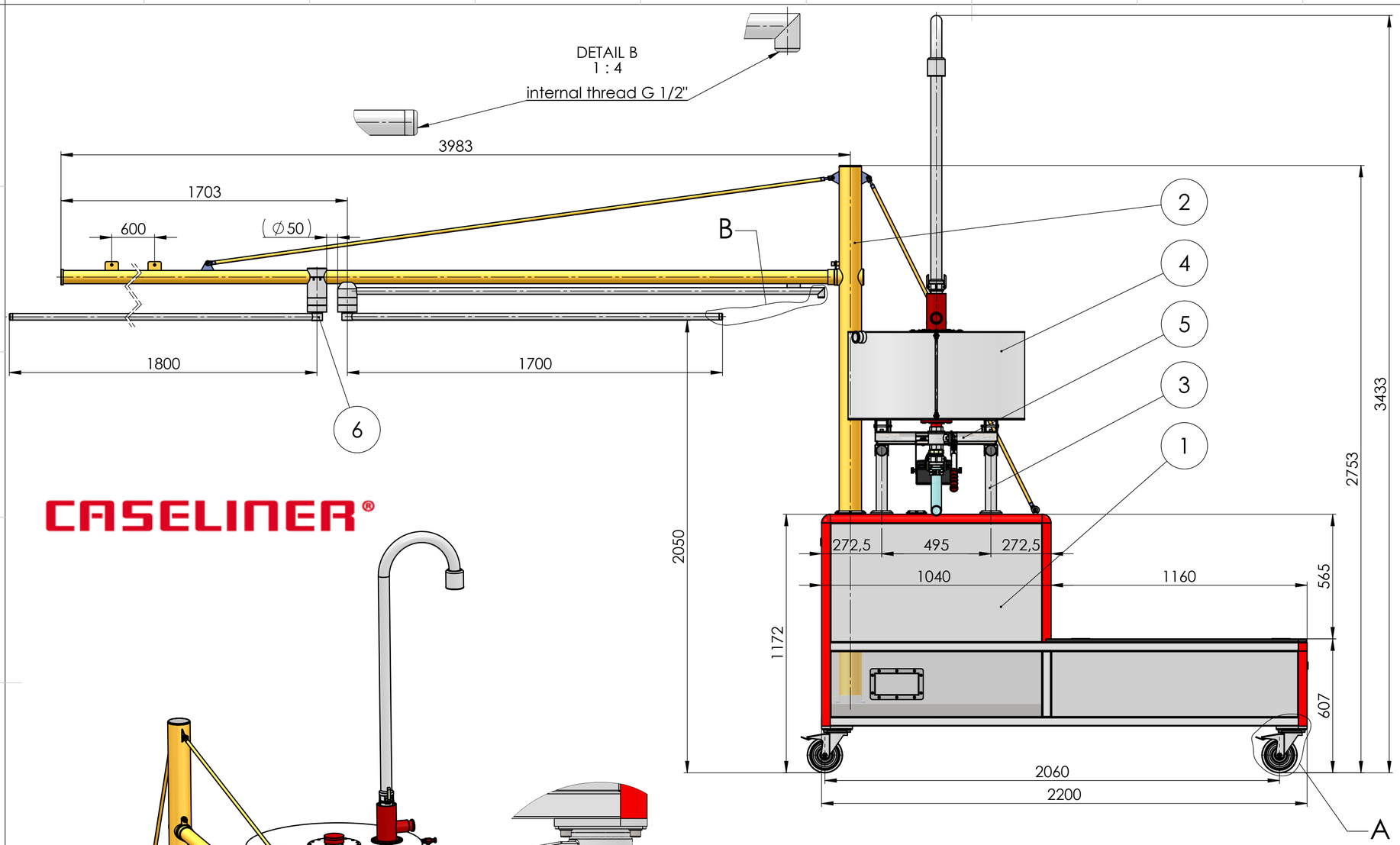

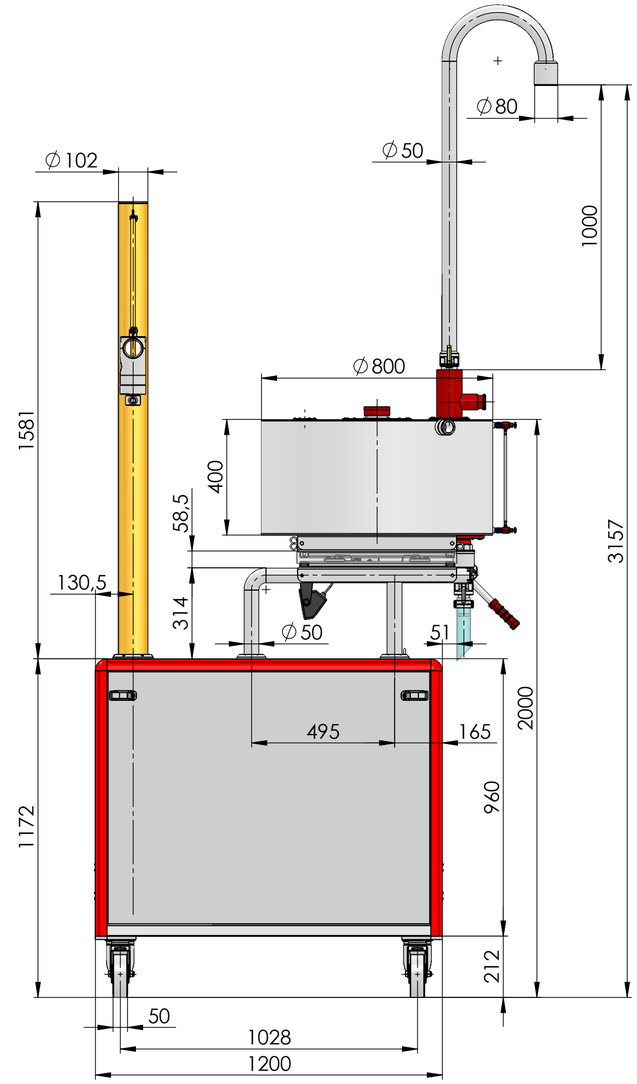

CASELINER®

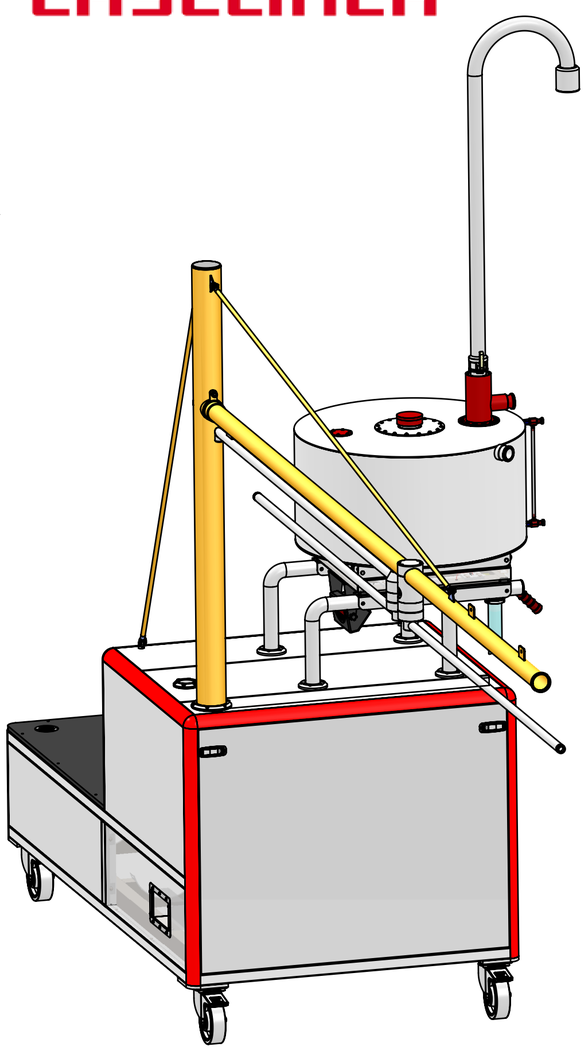

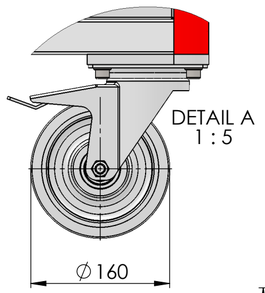

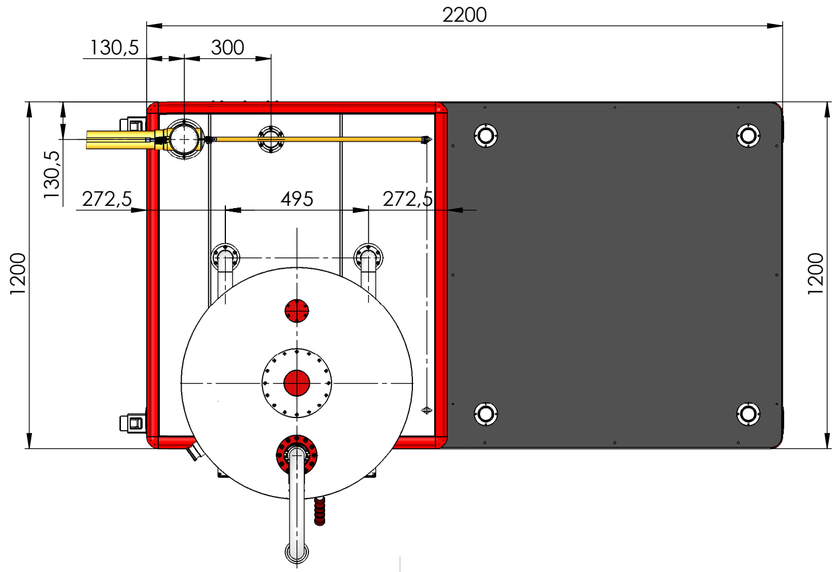

QUAN.	DESCRIPTION	PART CODE	WEIGHT	ANNOTATION	POS
1	ROTARY JOINT IJ100-C	0150311011	9.45 kg		6
1	WEIGHING CWU-300	0150221016	17.23 kg		5
1	RF200-FIA 252-7-WEC	0150121024	51.50 kg		4
2	RF200 HOLDERS OFF-SET	0150221012	3.00 kg		3
1	ROTARY BOOM IB100	0150311004	36.70 kg		2
1	PIT TROLLEY ENDURANCE, RIGHT POSITION	0150311021	187.62 KG		1

THE INFORMATION CONTAINED IN THIS DRAWING IS THE SOLE PROPERTY OF CASELINER, s.r.o..
ANY REPRODUCTION IN PART OR AS A WHOLE WITHOUT THE WRITTEN PERMISSION OF CASELINER, s.r.o. IS PROHIBITED.

CASELINER s.r.o.

UNLESS OTHERWISE SPECIFIED:
DIMENSIONS ARE IN MILLIMETERS
TOLERANCES: ISO 2768-1 - m

title - stock size:		dimension standard:	material standard:	part number:	
scale	drawn:		surface finish:		
1:15	date:	21.3. 2019	weight:	308.50 kg 680.76 lb	old drw.:
	approved by:		projection:		from day:
	date:		location:	D:\PROJEKTY SolidWorks\Caseliner\SW projekty\PIT TROLLEY ENDURANCE - 0150311018\SW\ZM	

CASELINER s.r.o.
Nad Jezerem 568
252 42, Vestec
Czech Republic

title:
PIT TROLLEY ENDURANCE / RIGHT POSITION / IB100 + IJ100C

dwg number:
PIT TROLLEY ENDURANCE / RIGHT POSITION / IB100 + IJ100C

sheet 5 / 6